LA ROSA
REFRIGERATION AND EQUIPMENT CO.

Modular Equipment 45000 Series

Creamer Units
- Remote



L-45160 shown with options

ITEM # _____

PROJECT _____

_____

_____

DATE _____

MODEL	LENGTH
L-45160	60"
L-45172	72"

DEPTH
32"

SPECIFICATIONS:

TOP: Die-formed construction of one-piece 16 GA stainless steel type 304-#4 finish with 2 5/8" nosing, Backsplash to be 3/8" coved, 6" high x 2 1/8" wide, Sheared ends fitted with recessed 12 GA steel bars for adjoining units, producing a hairline seam

OPENINGS: Die-formed raised, with high impact thermal breaker frames, Covers hinged in middle, insulated and removable, Openings will accomodate 3-gallon containers stacked 2 high

SYRUP RAIL: Compartment of 22 GA stainless steel type 304 #2B finished, Liner has cold wall type construction, Rail maintains a temperature of 38 to 40 degrees F, Jars, lids with ladles, pumps, spoon holder, and ice chest included

EXTERIOR: Back, bottom, and sides of 20 GA steel with painted enamel finish, Body supported by 14 GA galvanized steel box channels for legs

INTERIOR: Compartment of 22 GA stainless steel type 304-#2B finish, Liner has cold wall type construction, Freezer maintains a temperature of -5 to 0 degrees F and refrigerator maintains a temperature of 36 to 38 degrees F, The 17" deep refrigerated compartment contains the Heat-X for draft arms, (optional carbonator and pump avail.)

INSULATION: Rigid Polyurethane Foam

FRONT: Exterior removable panels of one-piece die-stamped 22 GA stainless steel type 304-#4 finish

LEGS: 6" high legs, 1 5/8" tubing welded to steel plate and fastened to body support channels, Bullet-foot has 1 1/8" of adjustment, All legs are stainless steel

REFRIGERATION: Remote unit has expansion valves, EPR valve for refrigerator and temperature control for Heat-X, System supplied with junction box ready for final connection, Recommended temperatures to operate with freezer at -5 to 0 degrees F, refrigerator at 36 to 38 degrees F, and syrup rail 38 to 40 degrees F

FEATURES

- 16 GA reinforced top
- Remote unit
- All Stainless Steel Interior lining with cold wall construction
- Refrigeration system has expansion valves & control for Heat-X, and EPR valve for refrigerator rapid recovery
- Uniform integration in design, quality and parts
- 3-gallon containers stack two high
- Chilled soda and water arms with drip tray
- Syrup rail has jars, lids with ladles, pumps, spoon holder, and ice chest

OPTIONS

- S/S Ends
- Carbonator & Pump assembly

Modular Equipment L-45000 Series - Creamer Units

DIMENSIONAL DATA

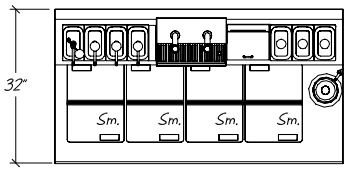

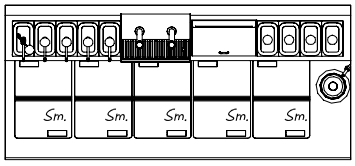

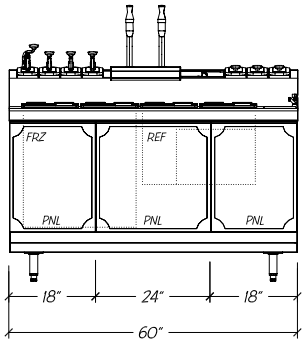

L-45160

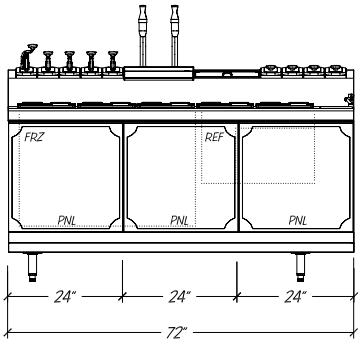

L-45172

STATISTICAL DATA

MODEL	LGTH	LIDS	GALLON CAPACITY		TOTAL PUMPS		TOTAL LIDS & LADLES	ICE CHEST	SPOON HOLDER	VOLTS/ CYCLE/ PHASE	TOTAL AMPS	REC HP R404 ii.	SHIP WT.
			# OF 3 GAL. CONTAINERS	TOTAL GAL.	HEAVY DUTY	STD.							
L-45160	60"	4 sm	8	24	1	3	2	1	1	115v/60/1	0.1	1/2	465#
L-45172	72"	5 sm	12	36	1	4	3	1	1	115v/60/1	0.1	1/2	515#

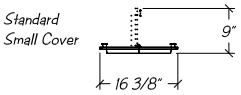

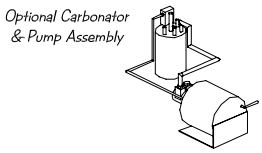

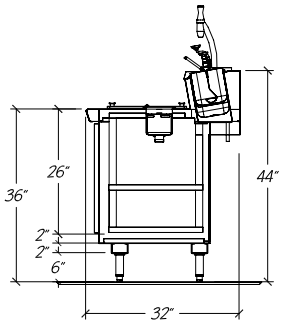

Notes:
i. Optional carbonator & pump assembly
ii. Recommended HP with up to 25 ft of refrigeration line (at listanner discretion)

Modular Equipment 45000 Series MECHANICAL DATA

- D1 — 1/2" MPT s/s drain for syrup rail 30" AFF w/ 42" tygon tubing attached
- D2 — 1 1/2" NPS sink drain 27" AFF
- D3 — 1" MPT drain for refrigerated compartment 16" AFF
- D4 — 5/8"OD s/s drain for soda trough 41" AFF
- CW1 — 3/8" flange w/ flexible beverage hose for water 6" AFF
- CW2 — Water supply 1/2" NPS Male inlet w/ 1/4" NPT connection 34" A.F.F.
- V — Expansion valve 28" AFF behind removable panel
- RL — Refrigeration Lines, 1/4" inlet and 3/8" suction 8" AFF
- S — 1 5/8"OD sleeve for optional carbonator tank electrical supply

