Modular Equipment 43000 Series

Ice Cream Cabinet - With Syrup Rail
Remote

ITEM # _____

PROJECT _____

_____

_____

DATE _____

MODEL	LENGTH
L-43132	32"
L-43142	42"
L-43154	54"

DEPTH
28" OR 32"



L-43154 shown with options

SPECIFICATIONS:

TOP: Die-formed construction of one-piece 16 GA stainless steel type 304-#4 finish with 2 5/8" nosing, Backsplash to be 3/8" coved, 6" high x 2 1/8" wide, Sheared ends fitted with recessed 12 GA steel bars for adjoining units, producing a hairline seam

OPENINGS: Die-formed raised, with high impact thermal breaker frames, Covers hinged in middle, insulated and removable, Openings will accomodate 3-gallon containers stacked 2 high

SYRUP RAIL: Compartment of 22 GA stainless steel type 304 #2B finished, Liner has cold wall type construction, Rail maintains a temperature of 38 to 40 degrees F, Jars, lids with ladles, and pumps included

EXTERIOR: Back, bottom, and sides of 20 GA steel with painted enamel finish, Body supported by 14 GA galvanized steel box channels for legs

CONDENSER HOUSING: Fitted with a stainless steel snap-on louvered panel

INTERIOR: Compartment of 22 GA stainless steel type 304-#2B finish, Liner has cold wall type construction and maintains a temperature of -5 to 0 degrees F

INSULATION: Rigid Polyurethane Foam

FRONT: Exterior removable panels of one-piece die-stamped 22 GA stainless steel type 304-#4 finish

LEGS: 6" high legs, 1 5/8" tubing welded to steel plate and fastened to body support channels, Bullet-foot has 1 1/8" of adjustment, All legs are stainless steel

REFRIGERATION: Remote unit has an expansion valve located behind front panels, Electrical supply not required for final field connection, Recommended temperature setting between -5 and 0 degrees F, Rail tested to operate between 38 and 40 degrees F (condenser and controls not included)

FEATURES

- 16 GA reinforced top
- Remote unit
- All Stainless Steel Interior lining with cold wall construction
- Refrigeration system has expansion valve
- Uniform integration in design, quality and parts
- 3-gallon containers stack two high
- Syrup rail has jars, lids with ladles, and pumps

OPTIONS

- S/S Ends

Modular Equipment L-43000 Series - Ice Cream Cabinets

DIMENSIONAL DATA

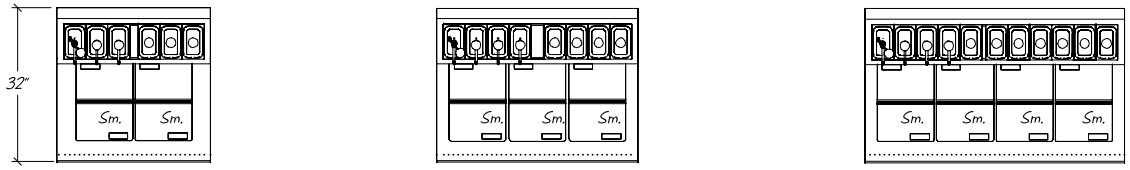

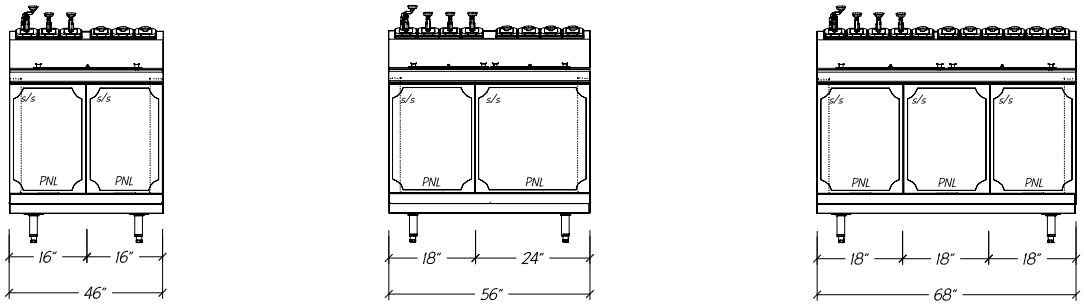

L-43132 L-43142 L-43154

STATISTICAL DATA

MODEL	LGTH	# OF LIDS		GALLON CAPACITY		TOTAL PUMPS		TOTAL LIDS & LADLES	VOLTS/ CYCLE/ PHASE	REC HP COMP. R404 i	NEMA PLUG	SHIP WT.
		28"D	32"D	# OF 3 GAL. CONTAINERS	TOTAL GAL.	HEAVY DUTY	STD.					
L-43132	32"	2 sm	1 lg	8	24	1	2	3	115v/60/1	1/4	5-15-P	290#
L-43142	42"	3 sm	2 sm	12	36	1	3	4	115v/60/1	1/4	5-15-P	325#
L-43154	54"	4 sm	2 lg	16	48	1	3	7	115v/60/1	1/3	5-15-P	370#

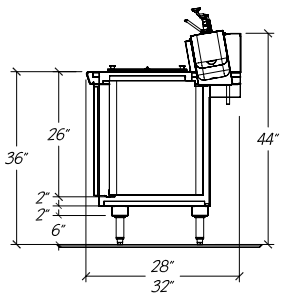

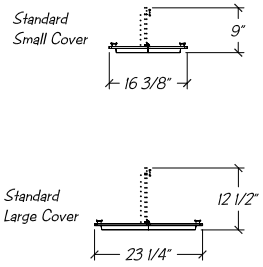

Notes: i. Recommended HP with up to 25 feet of refrigeration line (at installers discretion)

Modular Equipment 43000 Series MECHANICAL DATA

RL 8 Refrigeration Lines, 1/4" inlet and 3/8" suction 8" AFF

V Expansion Valve 28" AFF

C Centered over freezer compartment

P 1/2" MPT s/s drain for syrup rail 30" AFF w/ 42" Tygon Tubing attached

